ZM100

The smart lock with hybrid biometric recognition technology

Face Regonition
ZK Face Algorithm V7.0
Verification Speed< 1s

Touch Screen
2.8 Inches Capacitive Screen with Visual Menu

Z-ID Sensor
PIV Certificate, Live Fingerprint Detection (Dry, Wet, Rough).

Lithium Battery
The Rechargeable Battery Can Last One Year When It Is Fully Charged

Mutilple language
English, Spanish, Portuguese (Support Customization)

Mifare Card
Advanced Encryption Technology

Smart Alarm
Low Battery Warning & Illeglal Operation

USB Port
Upload and Download the Data via USB

Features

- Accurate and high-speed face recognization in 1:N mode
- Capacitive touch screen with visual icon menu
- Equipped with Z-ID fingerprint sensor
- Provide high security unlock way by safety mode - Face+Fingerprint
- Rechargeable lithium battery
- Reversible design to fit for all door open direction
- External terminals to draw back-up power from a 9V battery
- Smart alarm for low battery & illegal operation & Anti break-in
- Supported passage mode
- Mifare card module is optional

Specifications

Material	Zinc Alloy
100 User	Face/FP/Password/FRID Card
Card Module	Mifare
Communication	USB
Power Supply	4000mAh lithium battery
Battery Life	Over 8000 times
Door Thickness	35 - 90 mm
Dimensions	Front - 78(W)×350(L)×44(D) mm
	Back - 78(W)×350(L)×34(D) mm

Antique Copper

Silver

Gold

Dimensions

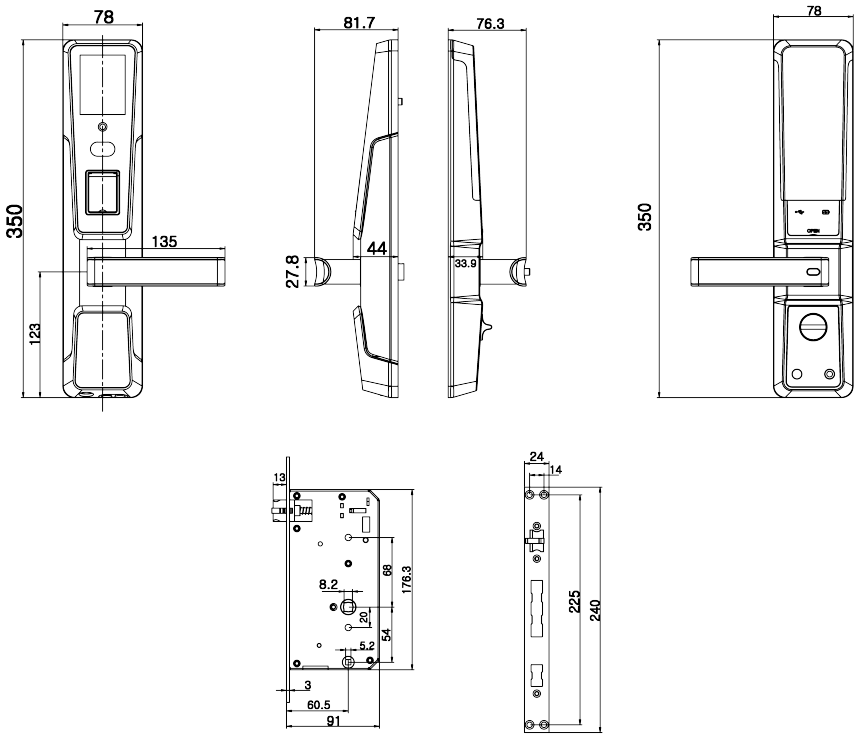

ZKTECO CO.,LTD. www.zkteco.com E-mail: sales@zkteco.com

Copyright © 2023 ZKTECO CO., LTD. All rights reserved.