DSP8062 DSP8063 DSP8064

Wall Mount Speaker with Power Tap

Description

This wall-mounted speaker features a sleek minimalist design in black or white, offering professional-grade sound quality with durable, high-quality materials for a clear and robust audio experience.

Features

- Fashion minimalist design aesthetic atmosphere,white black for choice.
- The integration of professional wall design, fine appearance, sophisticated high-grade filing.
- Focus on sound quality, inverse-phase type design, and equipped with high pitch and low pitch double unit, clear sound level, mellow, transparent, clear and bright, strong bass.
- Rear power adjustable knob, free choice of input mode.
- Mesh: made of 1060 pure aluminium, subject to hardening and anti-oxidation treatment,
- not easy to cause deformation, and never get rusty.
- Box body: made of UL94V-0 grade fireproof thickened ABS material, durable in use,
- safe and reliable.
- Driver unit: treble diaphragm is made of natural silk film; and bass diaphragm is made
- of polypropylene material, 3-3.5 inches magnetic circuit design.
- Mounting bracket: precision rust-proof treatment.

Specifications

Model		DSP8062	DSP8063	DSP8064
Acoustic System	Speaker Unit	4"×1, 1"×1	5"×1, 1"×1	6.5"×1, 1"×1
	Sensitivity (1m, 1W)	90±2dB	90±2dB	91±2dB
	MAX. SPL. (1m)	103±2dB	105±2dB	107±2dB
	Frequency Response	95Hz-20kHz	80Hz-20kHz	65Hz-20kHz

The specifications will be subject to change without prior notice.

Copyright © Guangzhou DSPPA Audio Co., Ltd. All rights reserved.

	Rated Power		20W	30W	40W
Power Adjustment	70V		20W-15W-8W-4W-2W	30W-15W-8W-5W-2.5W	40W-20W-10W-5W-2.5W
	100V		20W-15W-8W-4W	30W-15W-8W-5W	40W-20W-10W-5W
	8Ω		20W	30W	40W
Other Specifications	Input	Constant Voltage	70V/100V	70V/100V	70V/100V
		Constant Resistance	8Ω	8Ω	8Ω
	Dimensions (H×W×D)		255×176×170mm	280×194×185mm	310×215×203mm
	Net Weight		2.6kg	3.2kg	4.6kg

Front / Rear Panel

Product Information

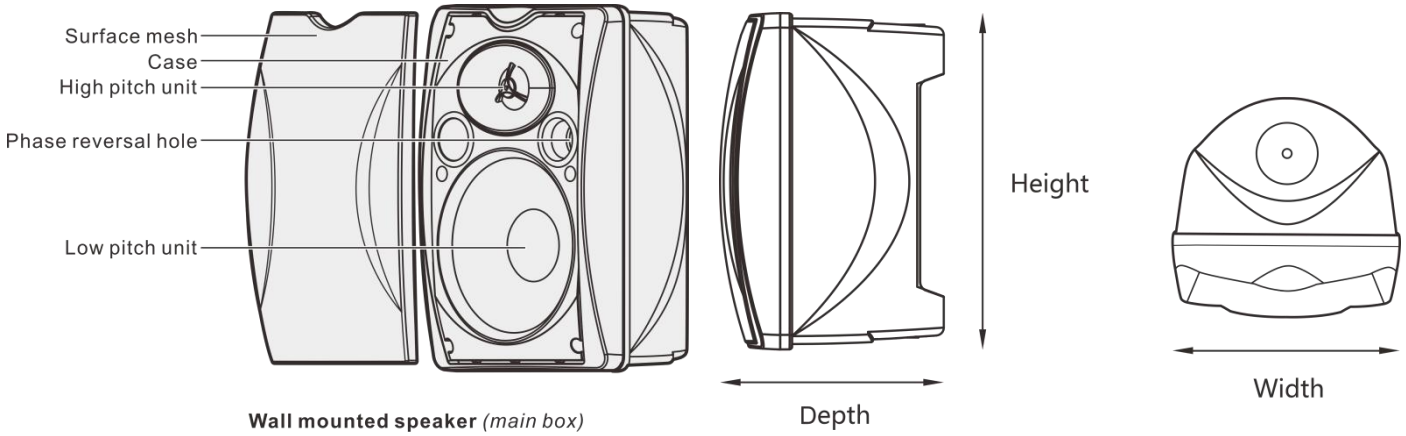

Wall mounted speaker *(main box)*

Model	Height	Width	Depth
DSP8062	255	176	170
DSP8063	280	194	185
DSP8064	310	215	203

Unit: mm

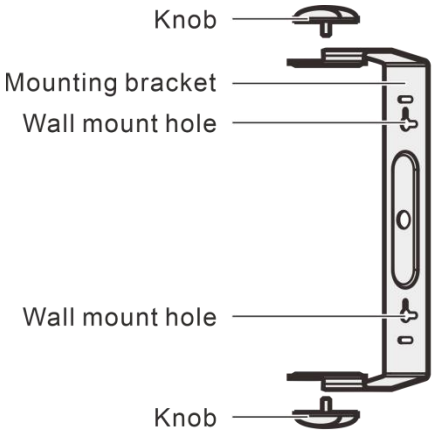

U-shape bracket

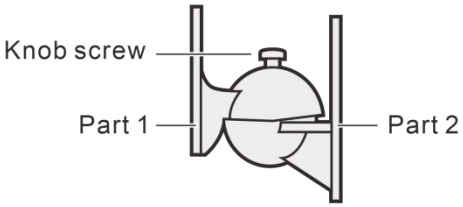

Multi-angle adjustable bracket
(only support purchasing for DSP8063)

The specifications will be subject to change without prior notice.

Copyright © Guangzhou DSPPA Audio Co., Ltd. All rights reserved.

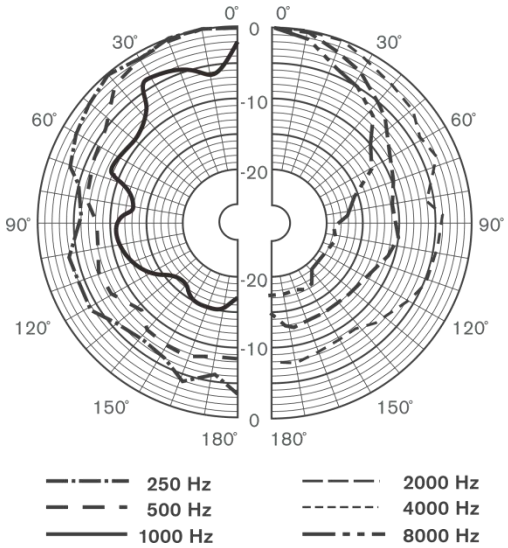

DSP8062

Vertical Directivity Pattern

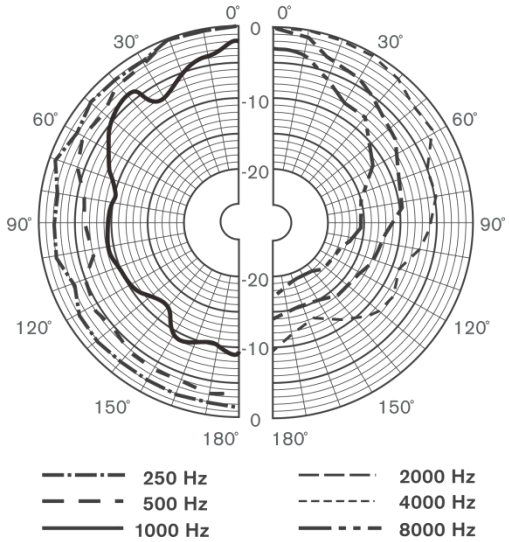

DSP8062

Horizontal Directivity Pattern

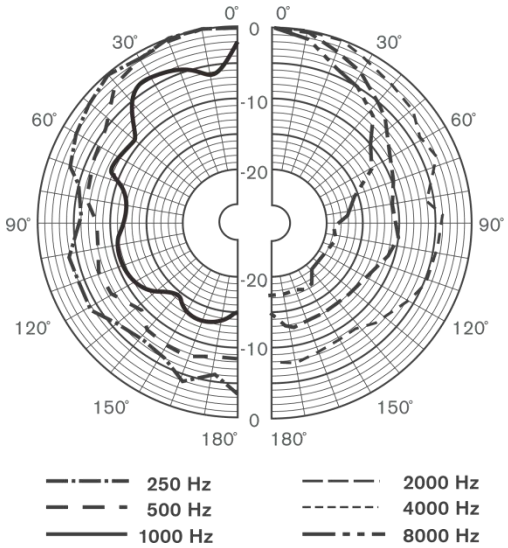

DSP8063

Vertical Directivity Pattern

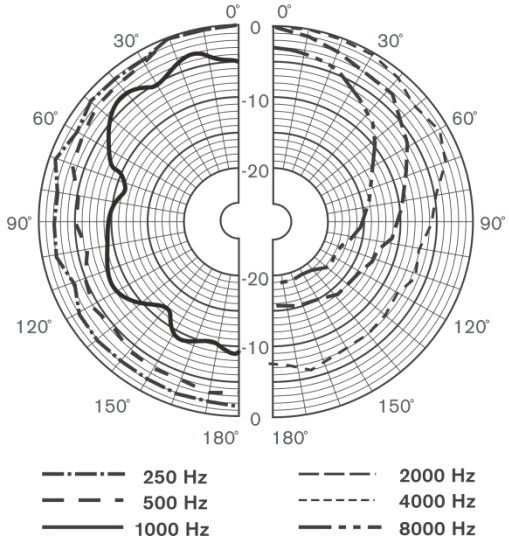

DSP8063

Horizontal Directivity Pattern

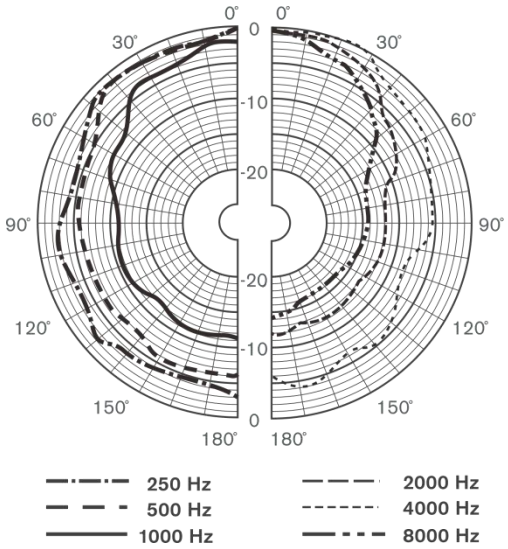

DSP8064

Vertical Directivity Pattern

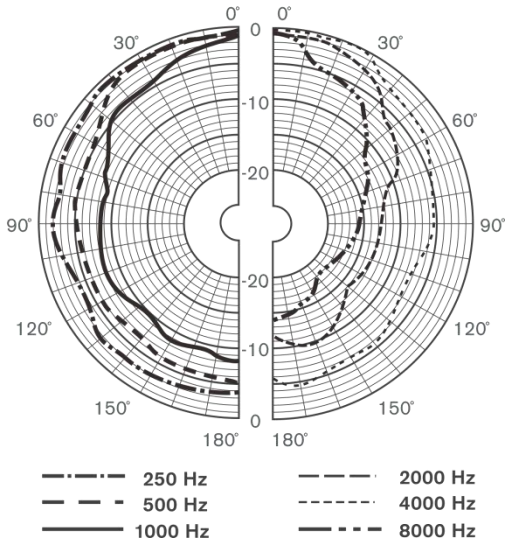

DSP8064

Horizontal Directivity Pattern

The specifications will be subject to change without prior notice.

Copyright © Guangzhou DSPPA Audio Co., Ltd. All rights reserved.

DSP8062 Frequency Response

(dB SPL, 1W, 1m)

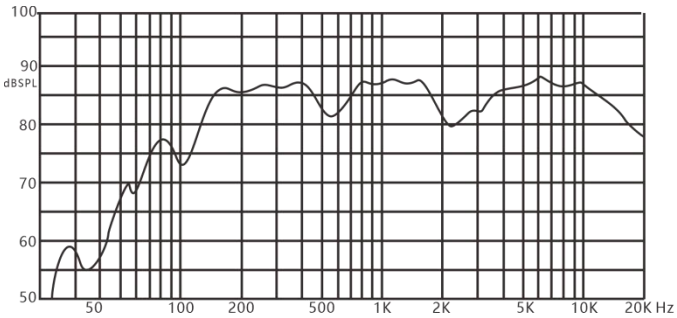

DSP8062 Distortion

(THD< 5% 1W, 1m, 100Hz-10kHz)

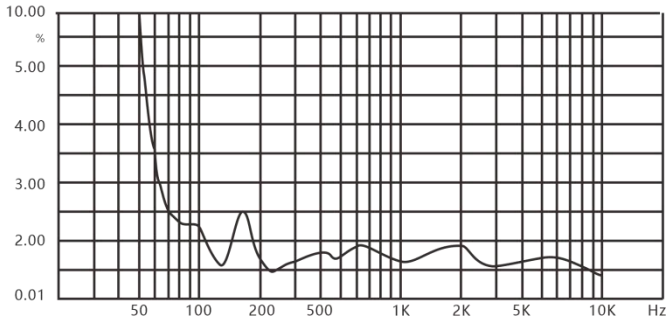

DSP8063 Frequency Response

(dB SPL, 1W, 1m)

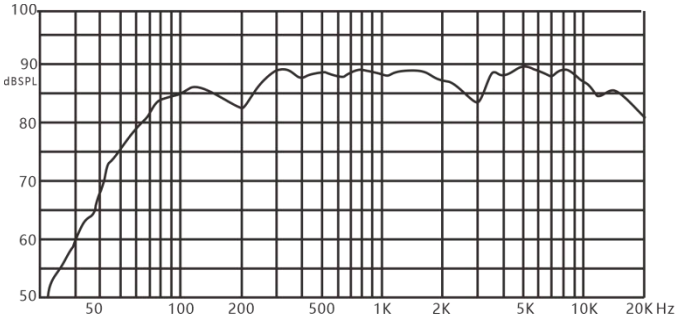

DSP8063 Distortion

(THD< 5% 1W, 1m, 100Hz-10kHz)

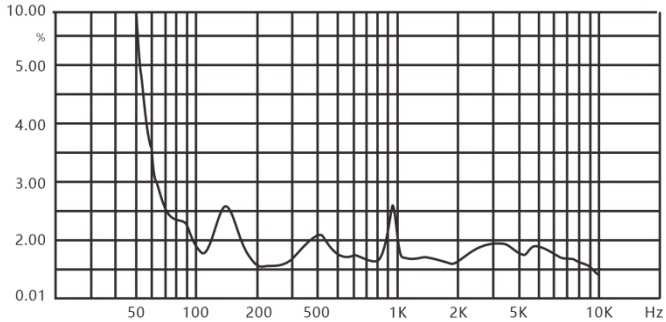

DSP8064 Frequency Response

(dB SPL, 1W, 1m)

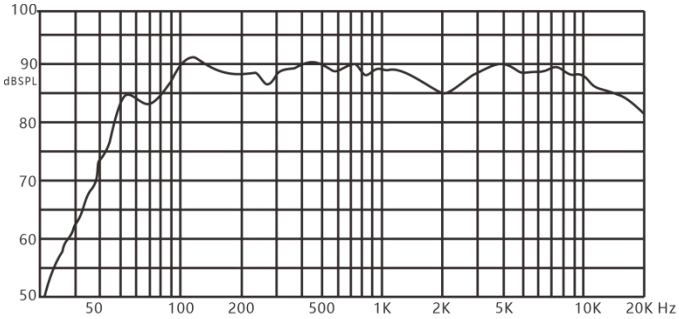

DSP8064 Distortion

(THD< 5% 1W, 1m, 100Hz-10kHz)

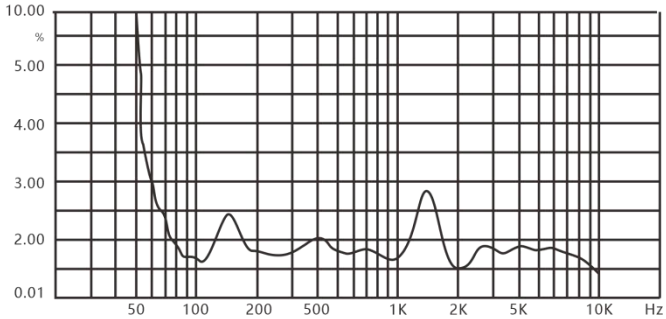

The specifications will be subject to change without prior notice.

Copyright © Guangzhou DSPPA Audio Co., Ltd. All rights reserved.