DSP1650

50W Waterproof Horn Speaker with Power Tap

Description

The DSP1650 waterproof horn speaker, with ABS horn and stainless steel bracket special designed for extreme weather conditions and outdoor installations. This speaker is solid and durable, long lifetime, high acoustic quality and wide coverage. Suitable for vehicle-bone, station, wharf, square installations for public security, tourism, teaching, transportation and environment use. 70V/100V transformer with variable power adaption.

Features

- Rated power: 50W
- Input signal:70/100V&8Ω
- Input power: 6W/12.5W/25W/50W
- Frequency response: 280Hz-4.5kHz
- Sensitivity 106±2dB;
- MAX SPL: 123±2dB
- Color: White,support OEM color
- IP rating: IP66
- Dimensions(W×H×L): 404*266*376mm

Specifications

Model	DSP1650
Rated Power	50W
Power Tap	0- 6W-12.5W-25W-50W-8Ω（100V input)
Input Voltage / Impedance	100V/8Ω
Frequency Response Range	280Hz-4.5kHz
Sensitivity	106±2dB
Sound Pressure Level	123±2dB

export@dsppa.com / www.dsppatech.com

The specifications will be subject to change without prior notice.

Copyright © Guangzhou DSPPA Audio Co.,Ltd All rights served.

Dimension	404(W) × 266(H)× 376(L)mm
Weight	4.2kg
Material&Finish	Finish: White ; Horn: ABS, Bracket: Steel
Working Environment	Temp -20℃~ +40℃, Humidity 45% ~ 85%, Elevation under 1000 m, Dust, corrosive gas or vibration which requires special condition must not exist

Product Information

Dimension Diagram

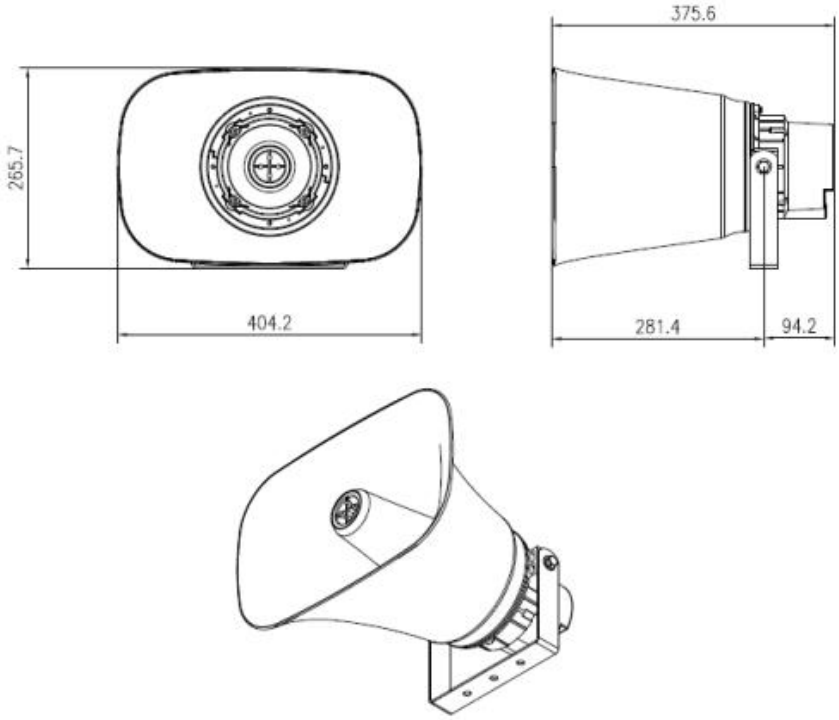

Frequency Response @ /1W/1m

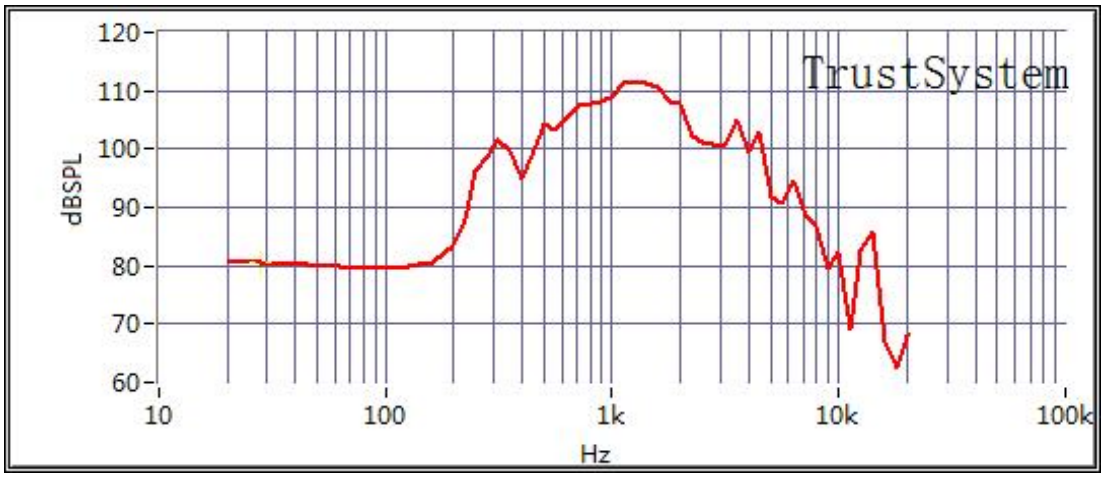

The specifications will be subject to change without prior notice.
Copyright © Guangzhou DSPPA Audio Co.,Ltd All rights served.