DSP118 DSP119

Mini Satellite Wall Mount Speaker

Description

This product is a mini satellite wall-mounted speaker, stylish in design and good in sound. DSP118 is an 8Ω constant-resistance speaker, while DSP119 is a 100V constant-voltage speaker with several power options. The speaker has a 2.75” driver unit for high-quality sound and a universal joint for easy installation. It can be mounted on walls at various angles.

Features

- Commercial PA system wall-mounted speaker.
- Rated output power of 10W at 8Ω for DSP118 or at 100V for DSP119.
- Power tap is optional as needed for DSP119.
- 1×2.75” driver unit.
- Quick installation with a universal bracket.
- Small and neat appearance with extraordinary sound quality.
- Ideal for the public address system of offices, hotels, bars and shopping malls.

The specifications will be subject to change without prior notice.

Copyright © Guangzhou DSPPA Audio Co., Ltd. All rights reserved.

Specifications

Model	DSP118	DSP119
Woofer	2.75” paper cone	
Frequency Response (±3dB)	100Hz-20KHz	
RMS Power	10W	
Sensitivity	85±3dB	
Transformer	N/A	N/C-10W-5W-2.5W-1.25W
Audio Input	8Ω	100V
Attachment	Bracket/Screw	
Product Dimensions	94×83×118mm (3.7”×3.26”×4.64”)	
Housing Material	ABS	

Installation

1. Fix the bracket to the wall.
2. Connect the speaker wire.
3. Attach phoenix connector to the speaker.
4. Attach the speaker to the bracket.

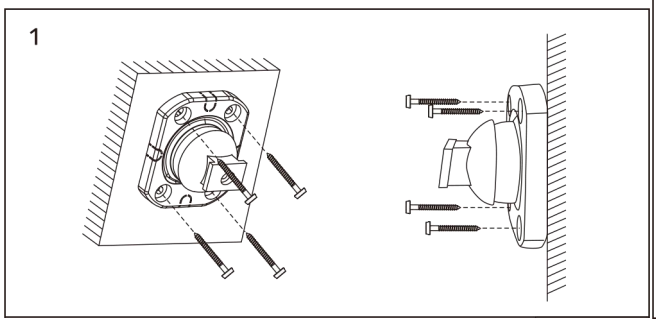

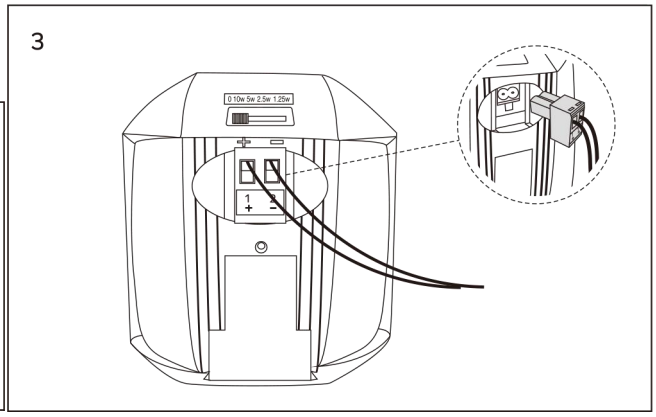

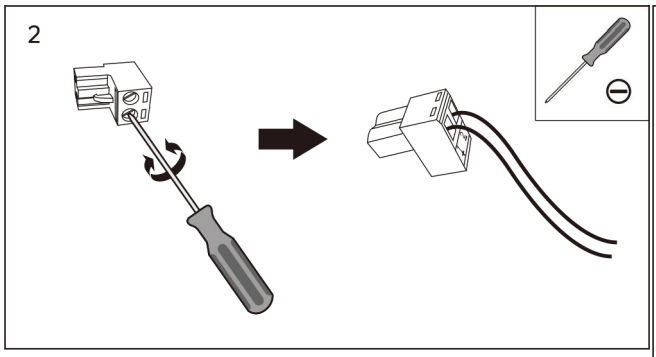

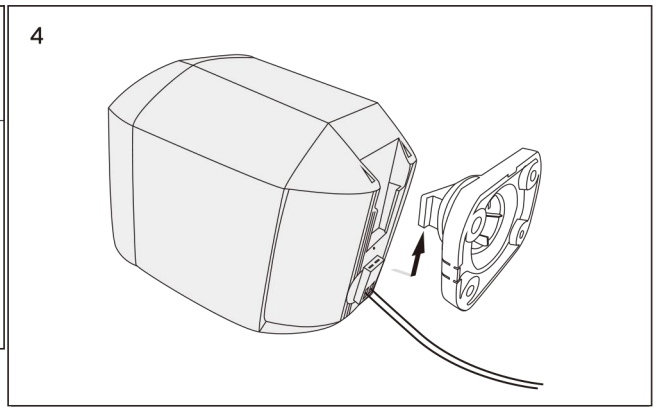

The specifications will be subject to change without prior notice.

Copyright © Guangzhou DSPPA Audio Co., Ltd. All rights reserved.