DSP1130

30W Waterproof Horn Speaker with Power Tap

Description

The DSP1130 waterproof horn speaker, with ABS horn and stainless steel bracket special designed for extreme weather conditions and outdoor installations. This speaker is solid and durable, long lifetime, high acoustic quality and wide coverage. Suitable for vehicle-bone, station, wharf, square installations for public security, tourism, teaching, transportation and environment use. 70V/100V transformer with variable power adaption.

Features

- IPX6 waterproof level
- Rated power: 30W
- Input signal:70/100V&8Ω
- Frequency response: 310Hz-5kHz
- Max. SPL(1m): 117±2dB
- Color: White,support OEM color
- IP rating: IP66
- Dimensions(W×H×L): 285*205*280mm

Specifications

Model		DSP1130
Rated Power		30W
Input	Constant Voltage	70V/100V
	Constant Resistance	8Ω
Frequency Response Range		310Hz-5kHz
Sensitivity(1m,1W)		102±2dB
Max.SPL(1m)		117±2dB

The specifications will be subject to change without prior notice.
Copyright © Guangzhou DSPPA Audio Co.,Ltd All rights served.

Dimension	285(W) × 205(H)× 280(L)mm
Weight	2.1kg
Material&Finish	Finish: White ; Horn: ABS, Bracket: Steel
Working Environment	Temp: -20℃~ +40℃, Humidity 45% ~ 85%, Height: <1000m, No Dust, Corrosive gas or Vibration

Product Information

Dimension Diagram

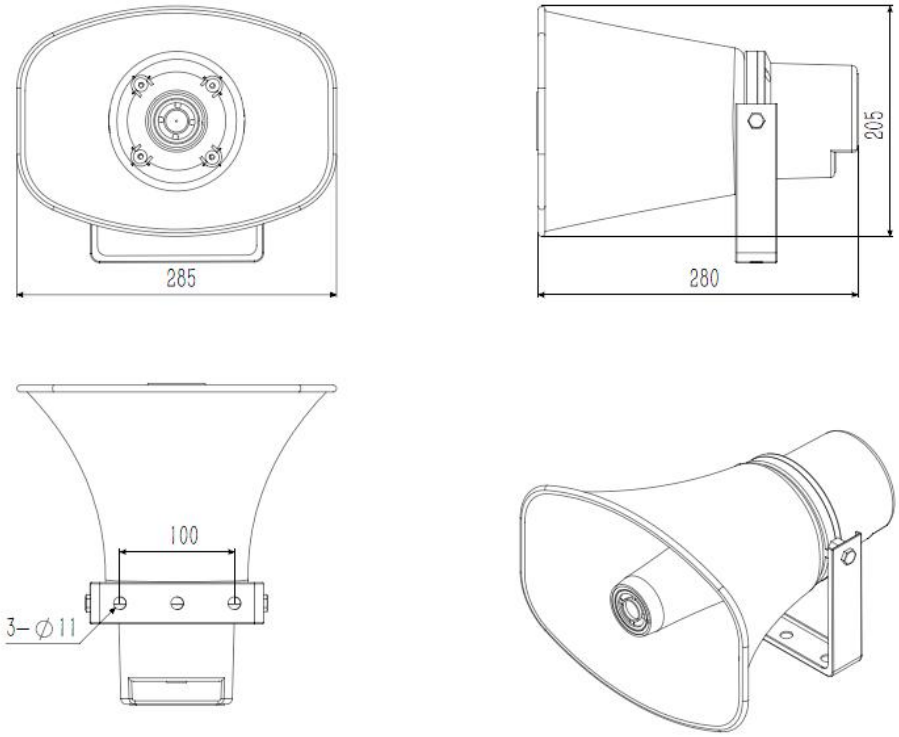

Frequency Response @ /1W/1m

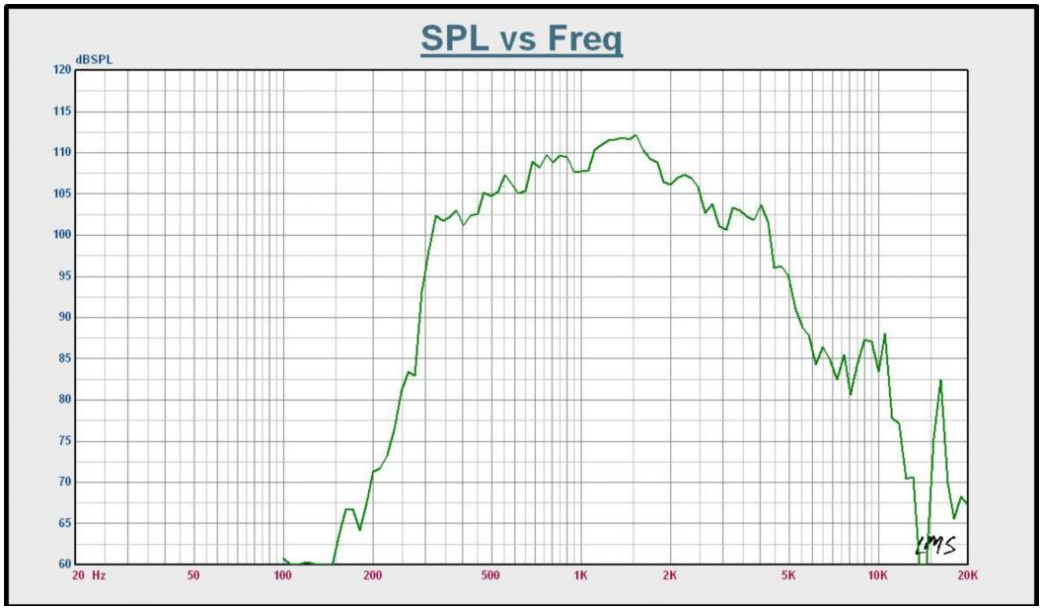

The specifications will be subject to change without prior notice.
Copyright © Guangzhou DSPPA Audio Co.,Ltd All rights served.