DMA6112 DMA6124 DMA60W DMA60M

Multi-function Matrix PA System

Description

The DMA6112 DMA6124 DMA60M DMA60W multi-function matrix public address system is a newly designed and highly integrated audio matrix host system. This new system not only features an 8×6 signal matrix but also includes multimedia playback capabilities. It incorporates a six-channel output design that supports both constant voltage and constant resistance output switching. Additionally, it supports the DMA60M remote paging microphone with a glass panel touch button design and the DMA60W Bluetooth touch panel, both as expansion peripherals. The multi-function matrix PA hosts DMA6112 and DMA6124 are specified at 6×120W and 6×240W, respectively, both designed with a 2U chassis. The high degree of integration in these devices helps save space and reduce wiring complexity. They come with a comprehensive set of logical interfaces and a well-defined priority system, making them suitable for most small to medium-sized broadcast system applications. Additionally, they can be integrated with other systems for enhanced functionality.

Features

- With a 4.3" resistive touch screen and a push-button power switch.
- Support 100V constant voltage function, configurable through the system.
- Chime function operable via the touch screen, with chimes and SIREN alarm sources changeable

The specifications will be subject to change without prior notice.

Copyright © Guangzhou DSPPA Audio Co., Ltd. All rights reserved.

through USB.

- SIREN alarm function, which can be triggered by dry contacts (2P of 7P) of 3.81mm Phoenix connectors on the rear panel.
- With treble and bass adjustment for AUX1, AUX2, MIC1/LINE1, and MIC2/LINE2 (rear panel).
- With 2 XLR input connectors for MIC1/LINE1 and MIC2/LINE2, selectable among MIC with 48V phantom power, standard MIC, and LINE via separate dip switches.
- With 2 RCA line input connectors for AUX1 and AUX2 (rear panel).
- With zone monitoring function, with monitoring volume varying with zone volume.
- Priority level: MUTE > EMC IN > SIREN > CHIME > remote paging microphone > Bluetooth touch panel > AUX1 = AUX2 = MIC1/LINE1 = MIC2/LINE2 = MP3 = BT = FM.
- With 6 LINE OUT (RCA) output connectors (corresponding to channels).
- With 6 Bluetooth panel interfaces with fixed zone addresses, powered by DC 48V, with a maximum transmission distance of 300-600 meters for each channel. You can only be allowed to control the audio source and volume of the corresponding zone via the Bluetooth panel.
- With 2 RJ-45 remote paging microphone interfaces, allowing for specific-zone or all-zone paging. Up to 2 remote paging microphones can be cascaded, powered by DC 48V, with a maximum transmission distance of 300-600 meters for each channel. You can control the playback of AUX1 or MP3 player audio sources across all zones and adjust the volume of the source with the paging microphone.
- With 1×3.81mm Phoenix connector (1P of 7P) for FM antenna.
- With 1×3.81mm Phoenix connector (2P of 7P) for EMC IN.
- With 1×3.81mm Phoenix connector (2P of 7P) for MUTE.
- With 1×3.81mm Phoenix connector for MONITOR SPEAKER OUTPUT, to monitor signal output, linked with zone volume.
- With 6×2-pin 5.08mm terminal block power output interfaces.
- With one independent Bluetooth antenna.
- Designed for AC220-240V power supply.

DMA60M Remote Paging Microphone Features

- With independent zone switches for quick control of the 6 zones of the amplifier.
- With signal level indication function for more intuitive paging volume.
- With key lock function.
- One chime tone with a descending tone.
- With dual RJ45 interfaces for zone control and override functions. When cascading paging stations with a single port, the mixer amplifier can support up to 2 paging stations on a single port, with a maximum transmission distance of 300m. If only one paging station is connected to the mixer amplifier, the transmission distance can be up to 600m. The paging microphone does not require a separate power adapter and it is powered and receives audio transmission from the DMA series 6-zone amplifier. Note: Each host supports a maximum of 2 remote paging microphones.
- With 1-channel microphone volume adjustment.
- With one-touch all-zone paging function.
- With anti-fingerprint coating for the touch panel.
- Equipped with priority function, with address 6 as the highest priority paging microphone.

The specifications will be subject to change without prior notice.

Copyright © Guangzhou DSPPA Audio Co., Ltd. All rights reserved.

Specifications

Model	DMA6112	DMA6124
AUX Input Sensitivity	AUX1=AUX2=775±100mV	
MIC Input Sensitivity	MIC1=MIC2=5±1mV	
LINE Input Sensitivity	LINE1=LINE2=350±50mV	
Output Power	120W*6	240W*6
Distortion at Rated Power (Within Frequency Response Range)	95V<1%	100V<5%
Microphone S/N Ratio A-Weighted	≥71dB	
Line S/N Ratio A-Weighted	≥76dB	
Line Input Frequency Response	80Hz-15kHz (under normal operating conditions ±3dB)	
Overload Source Electromotive Force	≧14dB (constant voltage)	
Operating Voltage	AC220-240V	
Tone Adjustment Range	Bass: ±10dB (100Hz), Treble: ±10dB (10kHz), both with an error of ±2dB	
LINE OUT Output Level	1000±100mV	
MIC1-2 Phantom Power	48V±5V	
Operating Temperature	-10-50℃	
Package Dimensions	535×540×155mm	
Machine Dimensions	483×353×88mm	
Gross Weight	8.45kg	
Net Weight	6.95kg	

Model	DMA60M
Sensitivity	30±3mV
Frequency Response	200Hz-15KHz
S/N Ratio	≥70db
RJ45 Connector	RS485 communication protocol
Input Power	Powered by the host
Package Dimensions (H×W×D)	425×285×115mm
Machine Dimensions (H×W×D)	172×160×53mm
Gross Weight	1.6KG
Net Weight	0.89KG

Model	DMA60W
Outer Package Dimensions (L×W×H) (mm)	144×121×91mm
Machine Dimensions (L×W×H) (mm)	86×86×38mm
Net Weight	0.25kg
Gross Weight	0.05kg

The specifications will be subject to change without prior notice.

Copyright © Guangzhou DSPPA Audio Co., Ltd. All rights reserved.

Front / Rear Panel

Front Panel

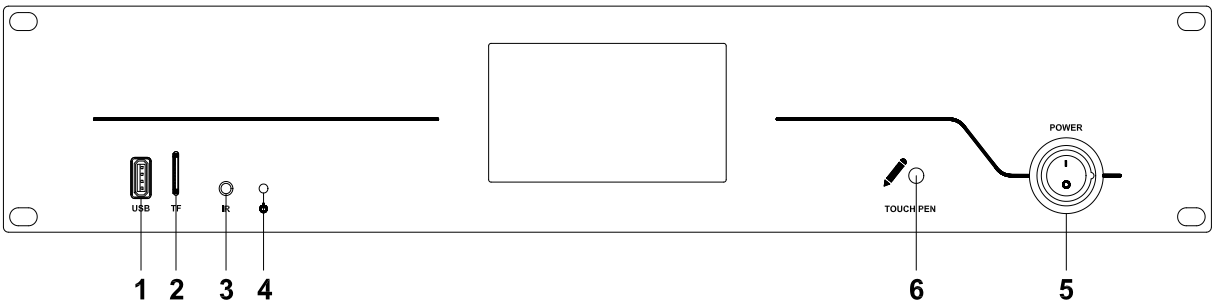

1. **USB Interface**

Insert a USB flash drive here to provide programs to the built-in MP3.

2. **TF Card**
3. **Infrared Receiving Window**
4. **Power Indicator**

The indicator light is yellow when the power is on.

5. **Power Switch**
6. **Stylus**

Rear Panel

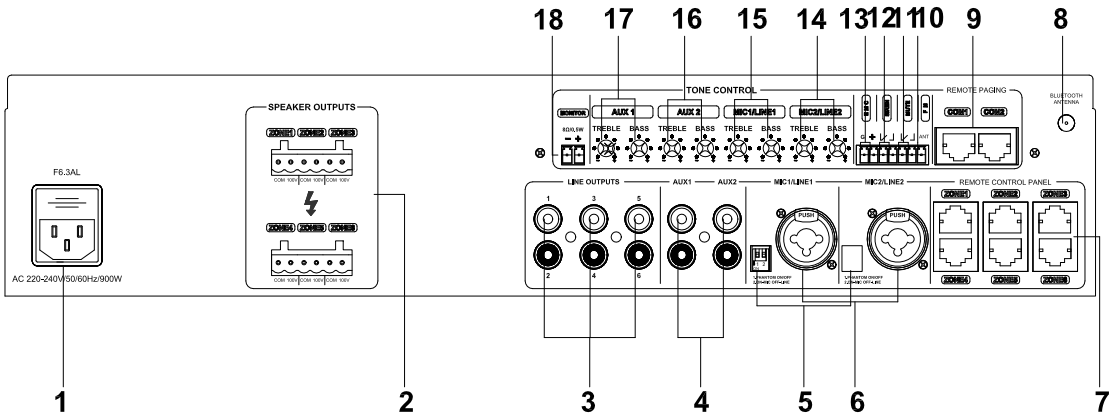

DMA6112 Rear Panel

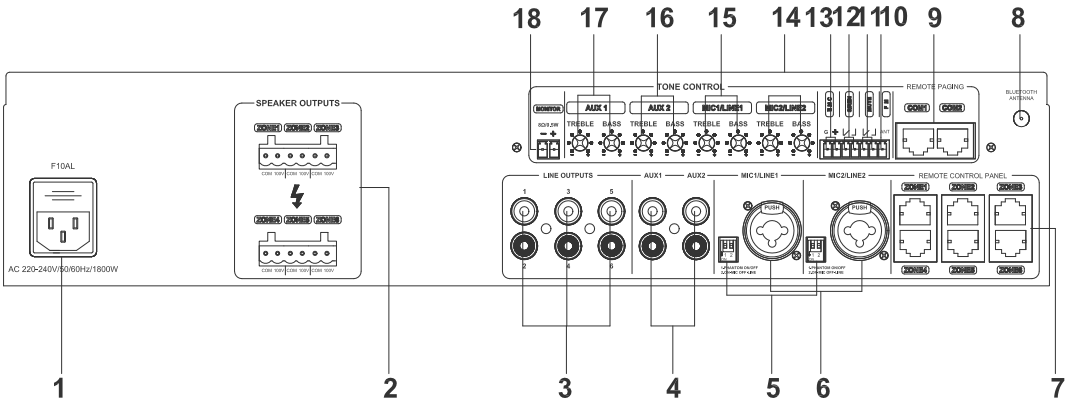

DMA6124 Rear Panel

The specifications will be subject to change without prior notice.

Copyright © Guangzhou DSPPA Audio Co., Ltd. All rights reserved.

1. **Power Input Socket (AC220V-240V)**

Connect the power plug to this interface. When connecting, please insert the plug into the machine first, then connect to the power grid.

2. **6 Speaker Output Connectors**

◆ Connected to constant-voltage speakers.

◆ Output voltage: 0~100V.

3. **LINE1/LINE2/LINE3/LINE4/LINE5/LINE6 Auxiliary Output Connector**
4. **AUX1/AUX2 Auxiliary Input Connector**
5. **2 DIP Switches**
6. **MIC1/LINE1 / MIC2/LINE2 Balanced Input Connector**
7. **6 Audio Bus Interfaces: ZONE1 is connected to CP1, ZONE2 is connected to CP2, ZONE3 is connected to CP3, ZONE4 is connected to CP4, ZONE5 is connected to CP5, and ZONE6 is connected to CP6. Strict adherence to this wiring is required; otherwise, the audio source of the Bluetooth touch panel can be controlled but cannot be output.**
8. **Bluetooth Antenna**
9. **Remote Paging Microphone Interface, connected to up to 2 paging microphones**
9. **FM Antenna Connector**
11. **MUTE Short Circuit Trigger**
12. **SIREN Short Circuit Trigger**
13. **EMC Emergency Trigger Input**
14. **MIC2/LINE2 Treble/Bass Potentiometer**
15. **MIC1/LINE1 Treble/Bass Potentiometer**
16. **AUX2 Treble/Bass Potentiometer**
17 **AUX1 Treble/Bass Potentiometer**
18. **Monitor Output, 8Ω/0.6W**

DMA60M Remote Paging Microphone

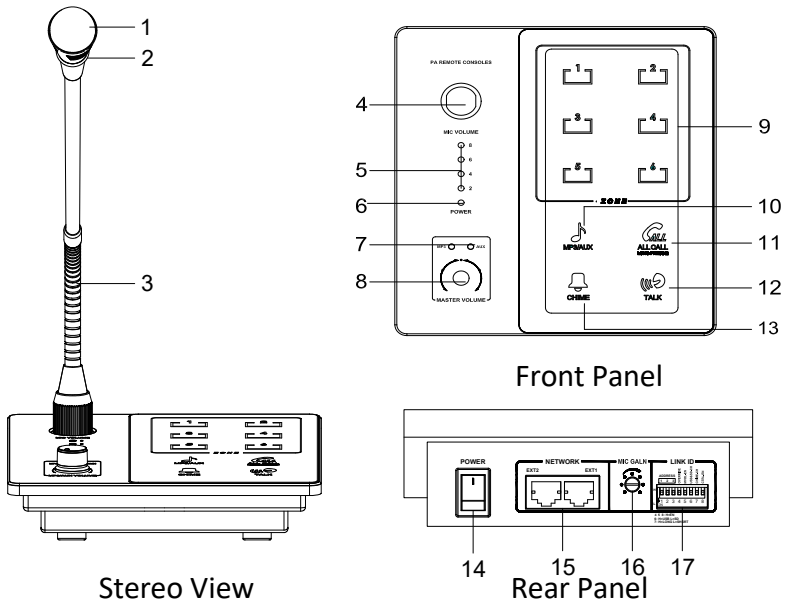

1. Microphone Head
2. Microphone Light Ring

● Lightly touch the voice broadcast button to activate the voice broadcast function. The light ring indicator will turn red, indicating that you can speak. Once the voice broadcast is turned off, the light ring indicator will go off.

The specifications will be subject to change without prior notice.

Copyright © Guangzhou DSPPA Audio Co., Ltd. All rights reserved.

3. Microphone Stem (with freely adjustable angle)
4. 5-Pin XLR Connector
- Removable 5-pin microphone connector.

5. 4-Segment Level Indicator
- The maximum volume indicator light is orange, while the other volume indicator lights are blue.

6. Power Indicator
7. AUX/MP3 Source Indicator
- When the host is playing MP3 sources, the MP3 source indicator light will be blue. When the host is playing AUX sources, the AUX source indicator light will be blue.
- This button indicator light changes according to the current audio source of the host.

8. AUX/MP3 Volume Knob
- When the AUX or MP3 source indicator light is blue, you can adjust the AUDIO SOURCE volume of the current AUX or MP3 audio source by turning clockwise to increase the volume and counterclockwise to decrease it.

9. 6-Zone Touch Buttons 1-6 (The button backlight is blue when selected)
10. Audio Source Switching Button
- Touch the button to enable audio source switching, indicated by a blue backlight; touch the button again to disable audio source switching, indicated by a white backlight.
- Short press the button to switch to switch the AUX or MP3 audio source.

11. All-Zone Broadcast Button
- Touch the button to enable all-zone broadcasting, indicated by a blue backlight; touch the button again to disable all-zone broadcasting, indicated by a white backlight.
- Long press the all-zone broadcast button for 1 second to lock all buttons, causing the all-zone broadcast button to blink once. Press and hold the button again for 2 seconds to return to normal.

12. Voice Broadcast Button
- Touch the button to enable voice intercom, indicated by an orange backlight; touch the button again to disable voice intercom, indicated by a white backlight.

13. Chime Button
- Touch the button to play a chime, indicated by a blue backlight. The chime will automatically stop after it finishes playing.
- Touch the button to play a chime.

14. Power Switch
- Press the "I" position to turn on the power, and press the other side to turn off the power.

15. Dual RJ45 Remote Communication and Audio Transmission Interfaces
- It can be cascaded, with a single port supporting up to 2 remote paging microphones, providing a maximum transmission distance of 300 meters.
- If a single port is connected to one remote paging microphone, the maximum transmission distance can reach up to 600 meters.
- Note: To ensure the effective transmission distance, use CAT5e cables or higher, with a single cable resistance of ≤12Ω per 100 meters.

16. Microphone Gain Control
- Turn clockwise to increase the volume and counterclockwise to decrease it.

17. 8 DIP Switches
- DIP 1, 2, 3 - for address settings.
- DIP 4 - for the override switch. When the switch is set to “H”, it is on; when set to “L”, it is off.
- DIP 5 - Not enabled yet.
- DIP 6 - Not enabled yet.
- DIP 7 - Not enabled yet.
- DIP 8 - must be set to “H” for normal use on DMA6112/DMA6124.

The specifications will be subject to change without prior notice.
Copyright © Guangzhou DSPPA Audio Co., Ltd. All rights reserved.

Typical Applications

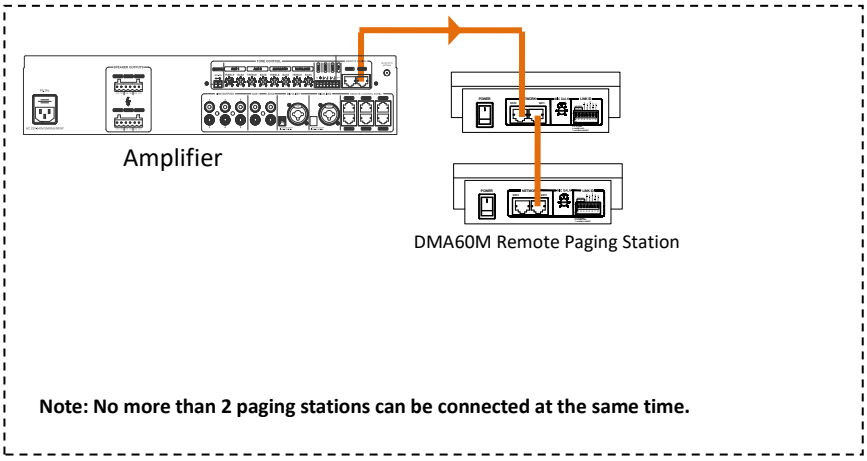

DMA60W Bluetooth Control Panel

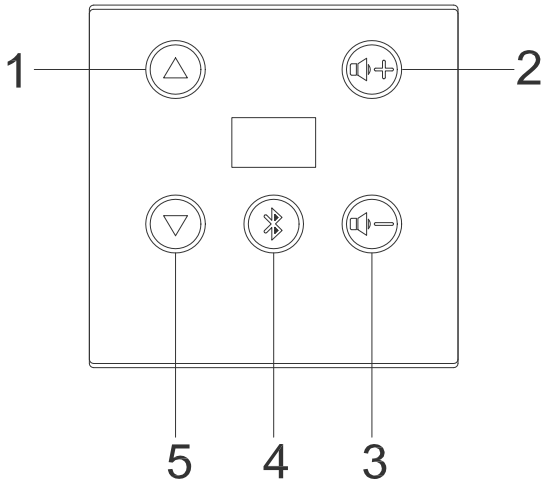

1. Previous Audio Source

A0: Composed of MP3, FM, and Bluetooth sources.
A1: Composed of AUX1 source.
A2: Composed of AUX2 source.
Zone 4: Composed of MIC1/LINE1 source.
Zone 5: Composed of MIC2/LINE2 source.
Zone 6: Composed of Bluetooth source.
Click this button to return to the previous audio source, and the button automatically cycles through A0-A5 to return to the previous audio source.

Notes:

- Status codes: C0-MUTE, C1-SIREN, C2-EMC, C3-Remote Paging Microphone.
- Error codes: E0-Communication failure (no response from the host for 3 seconds), E1-Associated zone amplifier failure.
- Three-bit address settings ADD1-3 (three IOs for PE4, PE6, PE7): ADD of 0-0-0 (Zone 1), 1-0-0 (Zone 2), 0-1-0 (Zone 3), 1-1-0 (Zone 4), 0-0-1 (Zone 5), 1-0-1 (Zone 6) represents the address of this Bluetooth control panel.
- The Bluetooth name changes according to the address bits: for 0-0-0 (Zone 1), the Bluetooth name is

The specifications will be subject to change without prior notice.
Copyright © Guangzhou DSPPA Audio Co., Ltd. All rights reserved.

CP1; for 1-0-0 (Zone 2), the Bluetooth name is CP2; for 0-1-0 (Zone 3), the Bluetooth name is CP3; for 1-1-0 (Zone 4), the Bluetooth name is CP4; for 0-0-1 (Zone 5), the Bluetooth name is CP5; and for 1-0-1 (Zone 6), the Bluetooth name is CP6.

2. Volume Increase

The volume can be adjusted freely within the range of 0-32.

3. Volume Decrease

The volume can be adjusted freely within the range of 0-32.

4. Bluetooth

Short press this button to quickly switch to channel A5. Long press this button to enable Bluetooth. If the Bluetooth connection is not established, the Bluetooth indicator will flash; otherwise, it will be normally on. On your phone, enable Bluetooth and search for Bluetooth names CP1-CP6. The phone will prompt you to enter a password. Enter the default password (1234) to pair. Once the phone displays “Connected to device”, you can start playing music from your phone.

5. Next Audio Source

The function is the same as the previous audio source button, but with a difference: clicking this button will switch to the next audio source, and the button automatically cycles through A0-A5 to the next audio source.

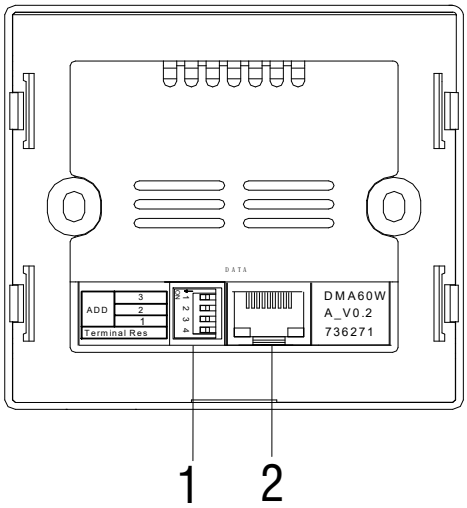

1. DIP Switch

Comparison table of zone address, DIP settings and Bluetooth name.

Address	DIP	Zone	Bluetooth Name
1	000	1	CP1
2	001	2	CP2
3	010	3	CP3
4	011	4	CP4
5	100	5	CP5
6	101	6	CP6

2. Network Interface

The specifications will be subject to change without prior notice.

Copyright © Guangzhou DSPPA Audio Co., Ltd. All rights reserved.

Installation Notes

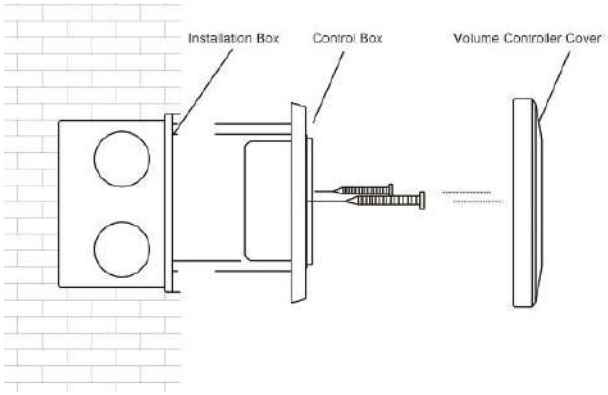

System Diagram

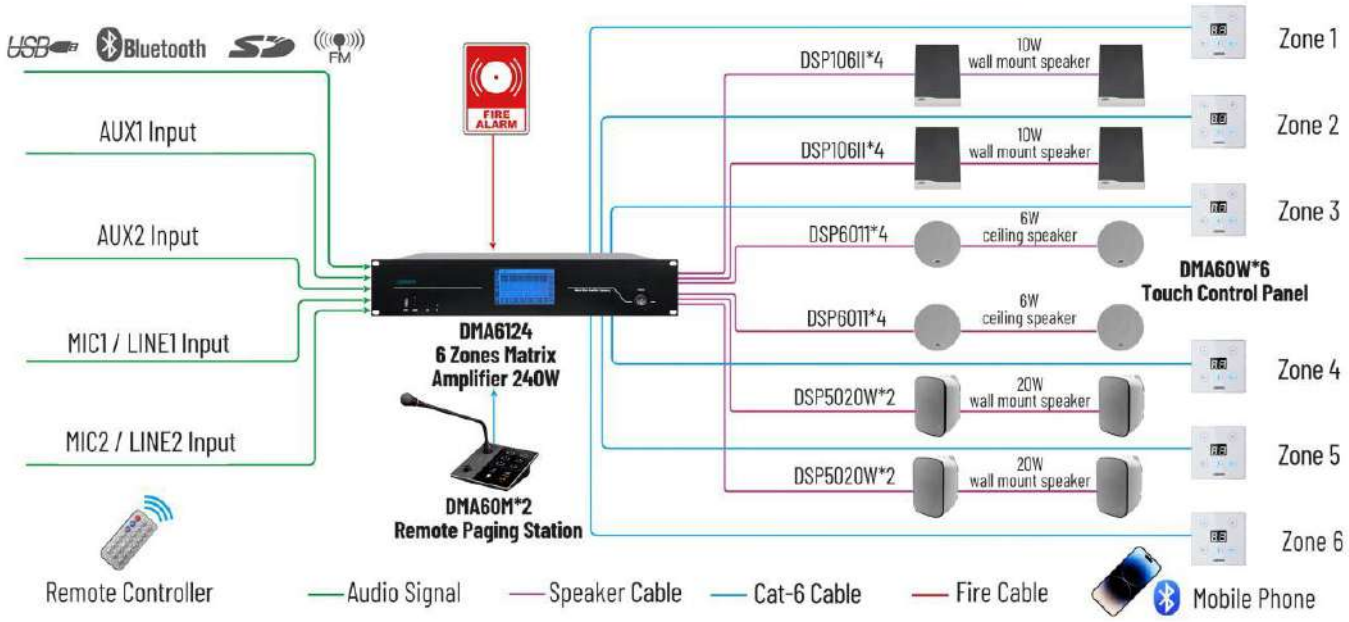

The specifications will be subject to change without prior notice.
Copyright © Guangzhou DSPPA Audio Co., Ltd. All rights reserved.