D5841 D5841L D5842 D5842L

D5843 D5843L D5844 D5844L D5845L

True Diversity Wireless Microphone System

D5816 UHF Wireless Microphone System for 4 Microphones

D5841 UHF Wireless Receiver + 4 Handheld MICs

D5842 UHF Wireless Receiver + 4 Lavalier MICs + 4 Waist-Mounted Transmitters

D5843 UHF Wireless Receiver + 4 Headset MICs + 4 Waist-Mounted Transmitters

D5844 UHF Wireless Receiver + 4 Battery-Powered Desktop MICs

D5841L UHF Wireless Receiver + 4 Rechargeable Handheld MICs

D5842L UHF Wireless Receiver + 4 Lavalier MICs + 4 Rechargeable Waist-Mounted Transmitters

D5843L UHF Wireless Receiver + 4 Headset MICs + 4 Rechargeable Waist-Mounted Transmitters

D5844L UHF Wireless Receiver + 4 Rechargeable Desktop MICs

D5845L UHF Wireless Receiver + 4 Rechargeable Desktop Mics

Description

This product is a professional wireless microphone system. D5816 is the wireless microphone receiver, which can work with four transmitters to form a wireless microphone system. Using four-channel PLL phase-locked loop design, it features UHF 200-channel PLL digital lock for automatic communication, and a display screen to display the frequency, channel, squelch, and electrical level.

The specifications will be subject to change without prior notice.
Copyright © Guangzhou DSPPA Audio Co., Ltd. All rights reserved.

Features

- Four-channel PLL phase-locked loop design.
- UHF200 channel PLL digital lock automatic communication function.
- Using infrared frequency pairing.
- With a display screen (to display the frequency, channel, squelch, and electrical level).
- With volume adjustment per channel.
- AF output (separate output with the “XLR” connector, and mixed output with the “XLR” connector and microphone jack).

Specifications

System Indicators		Parameters
Frequency Range		632-695.25MHz
Modulation Mode		Wideband FM
Adjustable Range		60MHz
Number of Channels		200
Channel Interval		250KHz
Frequency Stability		Within ±0.005%
Dynamic Range		88dB
Maximum Frequency Deviation		±45KHz
Audio Response		120Hz-16KHz (±3dB)
Comprehensive S/N Ratio		>73dB
Comprehensive Distortion		≤1%
Operating Temperature		-10°C - +40°C
Effective Range		150-200m (in open environment)
Package Dimensions (L×W×H)		530×335×220mm
D5841/D5841L Gross Weight		6.2kg
D5842/D5843/D5842L/D5843L Gross Weight		5.2kg
D5844/D5844L/D5845L Gross Weight		6.5kg
Receiver	Wireless Connector	BNC/50Ω
	Sensitivity	≤-95dBm
	Spurious Suppression	≥75dB
	Function Display Mode	Display screen
	Operating Power	DC12V, 600mA
	Package Dimensions (L×W×H)	530×335×100mm
	Machine Dimensions	430×176×44mm
	Gross Weight	3.9kg
	Net Weight	2.3kg

The specifications will be subject to change without prior notice.
Copyright © Guangzhou DSPPA Audio Co., Ltd. All rights reserved.

Transmitter							
Transmitter Type	Battery-powered desktop wireless microphone	Desktop wireless microphone (referred to the one in section 5)	Battery-powered handheld wireless microphone	Rechargeable handheld wireless microphone	Battery-powered portable transmitter	Rechargeable portable transmitter	Desktop wireless microphone (referred to the one in section 6)
Antenna Mode	Built-in onboard antenna	Built-in onboard antenna	Built-in onboard antenna	FPC antenna	1/4 wavelength whip antenna	1/4 wavelength whip antenna	FPC antenna
Output Power	High power 14dBm; low power 6dBm	High power 14dBm; low power 6dBm	High power 14dBm; low power 6dBm	High power 14dBm; low power 6dBm	High power 14dBm; low power 6dBm	High power 14dBm; low power 6dBm	High Power 10dBm; low power 2dBm
Spurious Suppression	-60dB	-60dB	-60dB	-60dB	-60dB	-60dB	-60dB
Power Supply Mode	4×AA 1.5V alkaline batteries	3.7V/2000mA lithium battery	2×AA 1.5V alkaline batteries	3.7V/3000mA lithium battery	2×AA 1.5V alkaline batteries	3.7V/3000mA lithium battery	3.7V/3000mA lithium battery
Battery Life	＞10 hours at 14dBm; ＞15 hours at 6dBm	＞10 hours at 14dBm; ＞15 hours at 6dBm	＞10 hours at 14dBm; ＞15 hours at 6dBm	＞10 hours at 14dBm; ＞ 15 hours at 6dBm	＞10 hours at 14dBm; ＞15 hours at 6dBm	＞10 hours at 14dBm; ＞ 15 hours at 6dBm	＞10 hours at 10dBm; ＞15 hours at 2dBm
Desktop Microphone Rod Length	420mm	420mm	——	——	——	——	420mm
Function Display Mode	Display screen	Display screen	Display screen	Display screen	Display screen	Display screen	Display screen
Machine Dimensions	151×100×55mm	151×100×55mm	50×265mm (Handheld part diameter ∅ 34~38mm)	35×250mm	110×64×25mm (Excluding antenna length, plus 80mm if included)	95×65×30mm	142*142*65mm
Weight	0.45kg	0.45kg	0.45kg	0.2kg	0.1kg	0.35kg	0.65kg

The specifications will be subject to change without prior notice.
Copyright © Guangzhou DSPPA Audio Co., Ltd. All rights reserved.

Receiver Front Panel

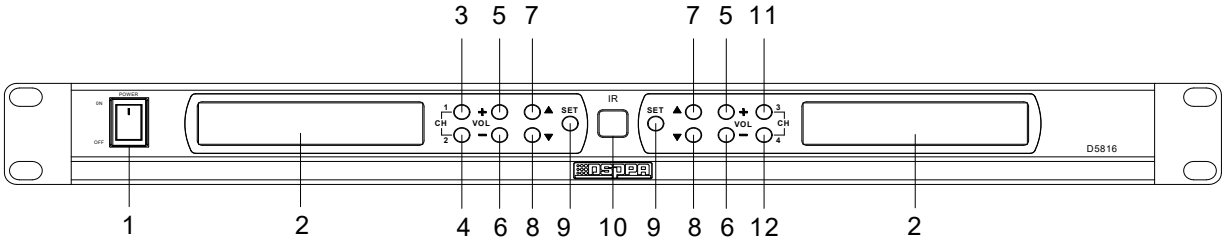

① Power Switch (POWER)

② Display Screen

③ Channel 1 Selection Button and Mode Switching Button

- Short press the button to select the channel 1.
- Press and hold the Channel 1 button to enter the mode switching function, and short press the Channel 2 button to switch between mode 1 and mode 2 **(see "3.8 Receiver Mode 1 and Mode 2 Switching" below for details)**.

④ Channel 2 Selection Button and Mode Switching Button

- Short press the button to select the channel 2.
- Press and hold the Channel 1 button to enter the mode switching function, and short press the Channel 2 button to switch between mode 1 and mode 2 **(see "3.8 Receiver Mode 1 and Mode 2 Switching" below for details)**.

⑤ Volume Control (+)

⑥ Volume Control (-)

⑦ Frequency Up Button

⑧ Frequency Down Button

⑨ SET Button

⑩ Infrared Frequency Pairing Part (used with the SET button to transmit the channel parameters to the transmitter)

⑪ Channel 3 Selection Button

⑫ Channel 4 Selection Button

Receiver Rear Panel

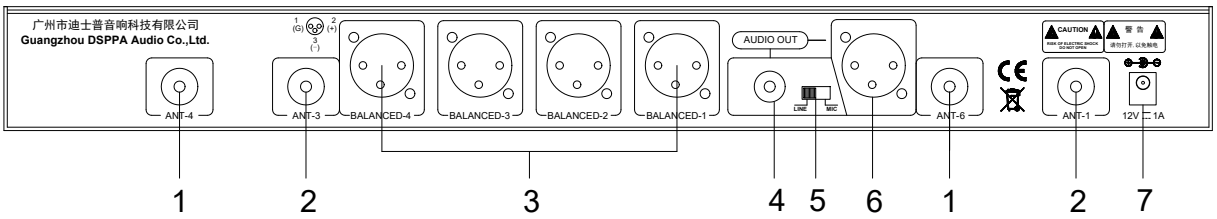

① 650M-700M Antenna Input Connector

② 630M-670M Antenna Input Connector

③ AF Channel 1/2/3/4 Output Port (using "XLR" connector, for separate output of 4-channel signals)

④ AF Mixing Output Microphone Jack (mix four signals for output)

⑤ Mixing Output Amplitude Adjustment Switch (only for "MIXOUT" microphone jack, set to LINE for 60mV, set to MIC for 7mV)

⑥ AF Mixing Output XLR Connector (mix four signals for output)

⑦ Power Input Connector (DC12V/2A)

The specifications will be subject to change without prior notice.
Copyright © Guangzhou DSPPA Audio Co., Ltd. All rights reserved.

Desktop Wireless Microphone Functions

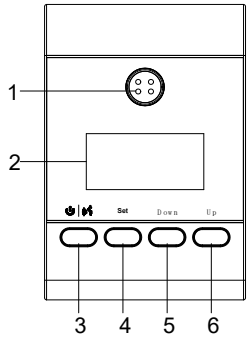

Front View

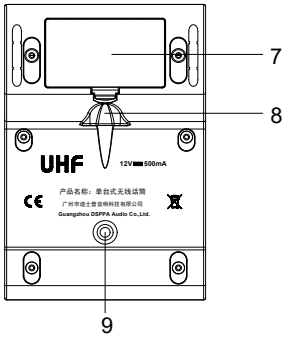

Bottom View

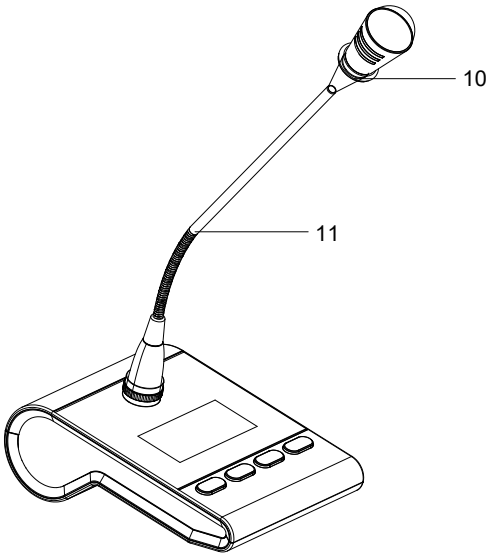

Stereoscopic View

① 4-Pin Connector for Connecting the Microphone Rod and Base
② Display Screen
③ Power Switch Button/Speak Button
④ SET Button
⑤ Down Button (DOWN)
⑥ Up button (UP)
⑦ Battery Cover (put 4 AA batteries)
⑧ DC12V DC Power Input (TYPE-C charging connector and indicator for the rechargeable microphone)
⑨ IR Infrared Frequency Pairing Window
⑩ Microphone Head Light Ring
⑪ Microphone Rod

Desktop Wireless Microphone Functions

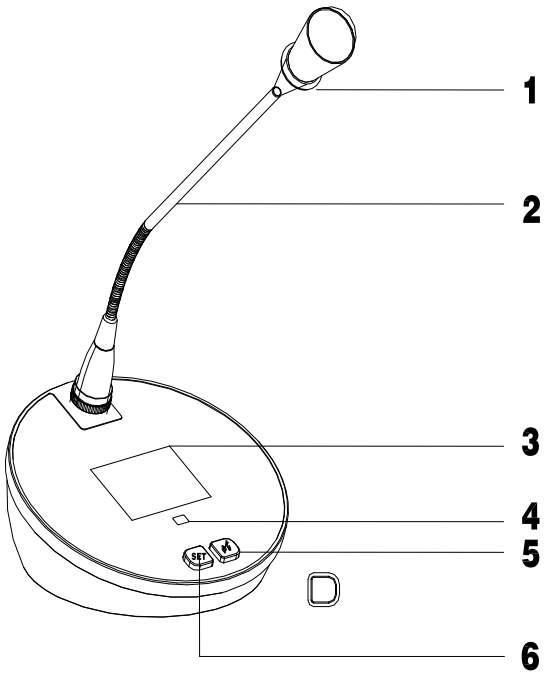

Front View

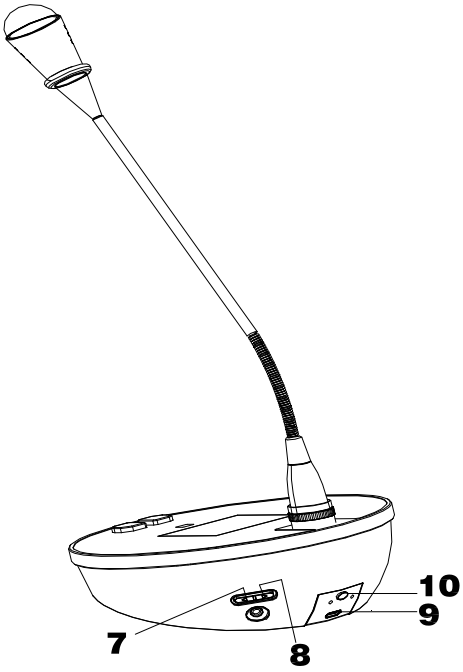

Back View

The specifications will be subject to change without prior notice.
Copyright © Guangzhou DSPPA Audio Co., Ltd. All rights reserved.

1. Microphone Head Light Ring
2. Microphone Rod
3. 2.4" TFT Color Screen
4. IR Infrared Frequency Pairing Window
5. Speak Button
6. SET Button
7. VOL “-” Button
8. VOL “+” Button
9. TYPE-C Charging Connector
10. Microphone On/Off Button

Battery-Powered Handheld Wireless Microphone Functions

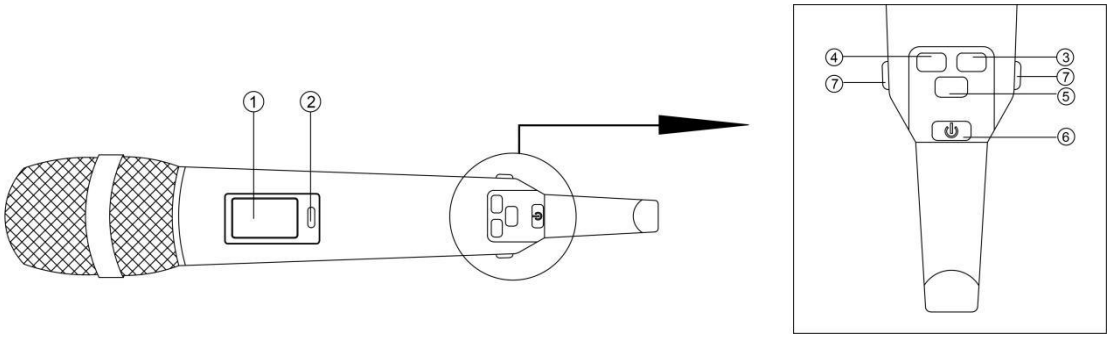

1. Display Screen (to display channel frequency, channel, and power)
2. Infrared Frequency Pairing Part (used with the “SET” button of the receiver to transmit channel parameters to the transmitter)
3. Up Button (to set volume level, switch between high and low power, and lock/unlock)
4. Down Button (to set volume level, switch between high and low power, and lock/unlock)
5. SET Button (to switch among volume VOLO5, PA reception enhancement, and LOCK function screens. Press the up or down button on the current screen to adjust the parameters of the current function.)
6. Touch Power Switch (in the off state, press once to power it on; in the on state, press and hold for 3 seconds to power it off.)
7. Battery Circlip Button (Press and hold the buttons on both sides at the same time with your left hand, and pull the bottom of the microphone slightly with your right hand to pull out the battery compartment.)

Rechargeable Handheld Wireless Microphone Functions

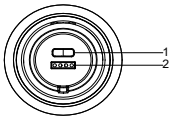

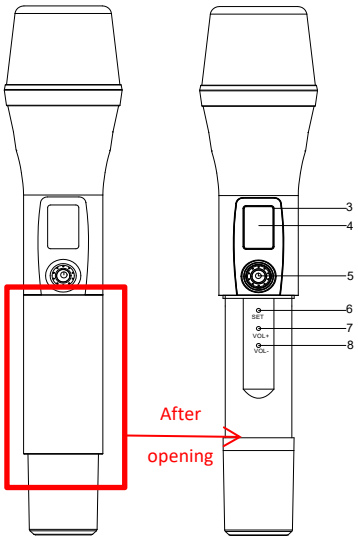

The specifications will be subject to change without prior notice.
Copyright © Guangzhou DSPPA Audio Co., Ltd. All rights reserved.

1. TYPE-C Charging Port (compatible with most mobile phone chargers on the market)
2. Desktop Charger Charging Port (align the bottom contact with the U-band wireless system-specific charging box for charging)
3. Display Screen (to display channel frequency, channel, power and volume)
4. Infrared Frequency Pairing Part (used with the “SET” button of the receiver to transmit channel parameters to the transmitter)
5. Power Switch (in the off state, press and hold for 3 seconds to power it on; in the on state, press and hold for 3 seconds to power it off.)
6. SET Button (for LOCK, high and low power switching, and channel mode switching)
7. VOL+ (to set volume level, switch between high and low power, lock/unlock, and switch between channel modes)
8. VOL- (to set volume level, switch between high and low power, lock/unlock, and switch between channel modes)

Battery-Powered Portable Transmitter Functions

1. Status Indicator
2. Gain Adjustment
3. Microphone Input Jack
4. Antenna (1/4 Wavelength Whip Transmitting Antenna)
5. Display Screen (to display current working channel and battery level)
6. Power Switch
7. Infrared Frequency Pairing Part (used with the “SET” button of the receiver to transmit channel parameters to the transmitter)
8. Battery Compartment
9. Waist-Mounted Clip (to attach the mini microphone to the belt)

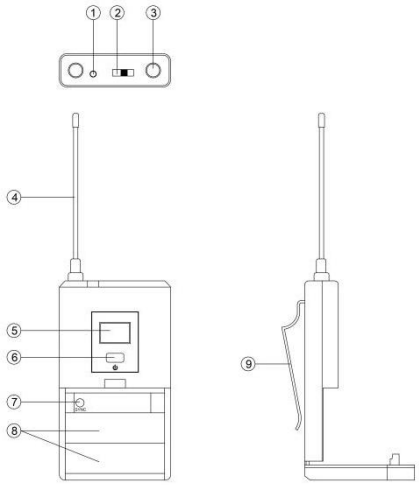

Rechargeable Portable Transmitter Functions

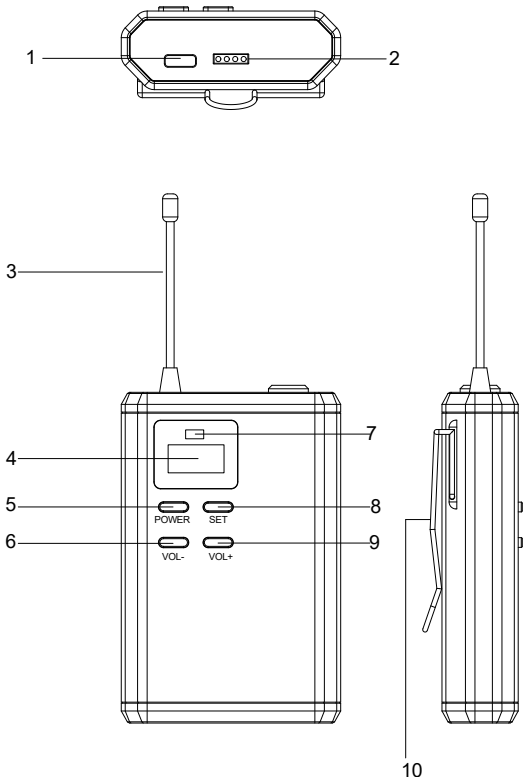

1. TYPE-C Charging Port (align the bottom contact with the U-band wireless system-specific charging box for charging)
2. Desktop Charger Charging Port (align the bottom contact with the U-band wireless system-specific charging box for

The specifications will be subject to change without prior notice.
Copyright © Guangzhou DSPPA Audio Co., Ltd. All rights reserved.

charging)

3. Antenna (1/4 Wavelength Whip Transmitting Antenna)

4. Display Screen (to display current working channel and battery level)

5. Power Switch (in the off state, press and hold for 3 seconds to power it on; in the on state, press and hold for 3 seconds to power it off.)

6. VOL- (to set volume level, switch between high and low power, lock/unlock, and switch between channel modes)

7. Infrared Frequency Pairing Part (used with the “SET” button of the receiver to transmit channel parameters to the transmitter)

8. SET Button (for LOCK, high and low power switching, and channel mode switching)

9. VOL+ (to set volume level, switch between high and low power, lock/unlock, and switch between channel modes)

10. Waist-Mounted Clip (to attach the mini microphone to the belt)

The specifications will be subject to change without prior notice.
Copyright © Guangzhou DSPPA Audio Co., Ltd. All rights reserved.