AE-DC5013-F6
Dash cam

Key Features

- Up to 1600P high resolution, gold wide angle up to 130° .
- F1.6 super large aperture offering a perfect night image.
- Support built-in MIC and speaker for audio in and out.
- Built-in WIFI module and WIFI AP function supported.
- Built-in G-Sensor module, support video recording linkage at car crash or strong vibration. (Linkage video record can be configured be no-overwritten)
- TF card for video recording, up to 256 GB. (Overwriting supported)
- Phone App: live view, record playback and parameter configuration.
- Voice recognition supported : Snapshot, Recording on, Recording off.
- ADAS supported: “Traffic light turn green”, “Speed limit recognition”, “Front car start remind”.
- Easy installation and user friendly, plug and play. (Automatically recording after power on)
- Low power consumption and high performance.

Available Model

AE-DC5013-F6

Specifications

Model	AE-DC5013-F6
Camera	
Image sensor	CMOS
Resolution	1600p@30fps, 1600p@25fps; 1440p@30fps, 1440p@25fps; 1080p@30fps, 1080p@25fps
Angle adjustment	130° (D), 109° (H)
Aperture	F1.6
Video compression	H.265
OSD	Display time, date, etc.
Image format	JPEG
Storage	TF card, Max. 256 GB
Communication module	Wi-Fi
Sensor	G-sensor
Interfaces	
Power supply	USB 2.0
Audio input	MIC
Audio output	Built-in Loudspeaker
General	
Working temperature	-20 °C to 70 °C (-4 °F to 158 °F)
Working humidity	0% to 95%
Power supply	5 VDC, 2 A
Power consumption	Max. 5 W
Dimension (L x W x H) (without bracket)	52mm x 50.4mm x 51.9mm (2.04" x 1.98" x 2.04")
Weight (Approx)	120 g (0.26 lb)

Dimensions

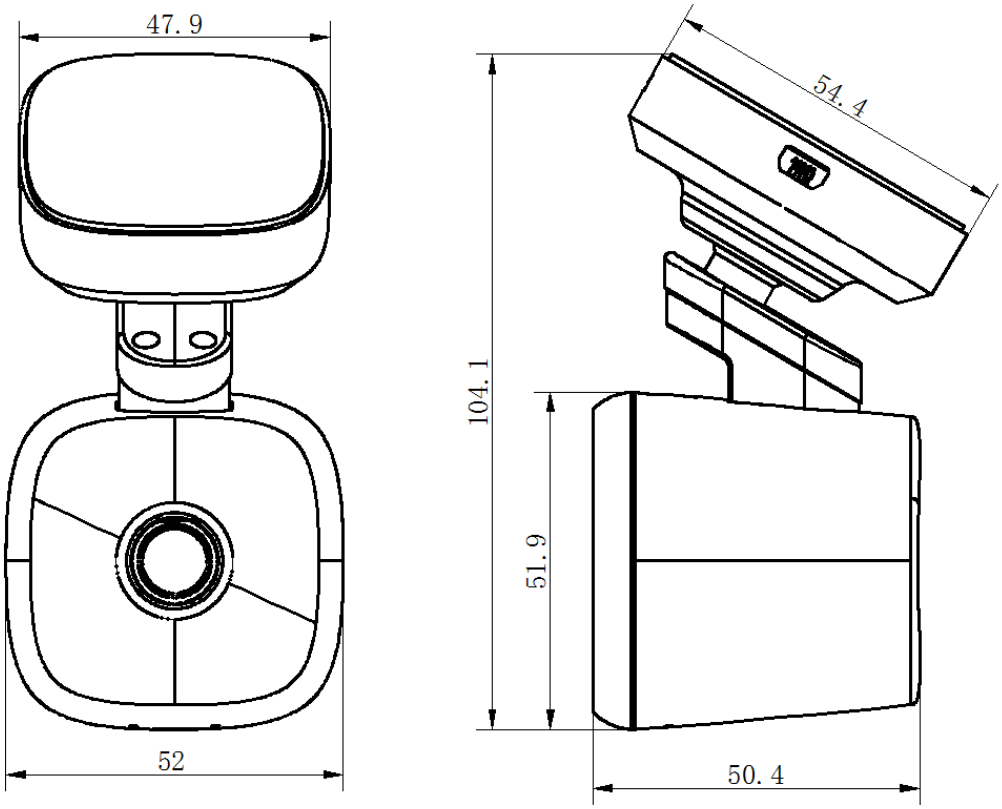

Distributed by

Headquarters
No.555 Qianmo Road, Binjiang District,
Hangzhou 310051, China
T +86-571-8807-5998
overseasbusiness@hikvision.com

Hikvision USA
T +1-909-895-0400
sales.usa@hikvision.com

Hikvision Europe
T +31-23-5542770
sales.eu@hikvision.com

Hikvision UK & Ireland
T +01628-902140
sales.uk@hikvision.com

Hikvision UAE
T +971-4-4432090
salesme@hikvision.com

Hikvision Russia
T +7-495-669-67-99
saleru@hikvision.com

Hikvision Australia
T +61-2-8599-4233
salesau@hikvision.com

Hikvision Italy
T +39-0438-6902
info.it@hikvision.com

Hikvision South Africa
Tel: +27 (10) 0351172
sale.africa@hikvision.com

Hikvision Singapore
T +65-6684-4718
sg@hikvision.com

Hikvision Korea
T +82-(0)31-731-8817
sales.korea@hikvision.com

Hikvision India
T +91-22-28469900
sales@pramahikvision.com

Hikvision Brazil
T +55 11 3318-0050
Latam.support@hikvision.com

Hikvision France
T +33(0)1-85-330-450
info.fr@hikvision.com

Hikvision Spain
T +34-91-737-16-55
info.es@hikvision.com

Hikvision Poland
T +48-22-460-01-50
info.pl@hikvision.com

Hikvision Canada
T +1-866-200-6690
sales.canada@hikvision.com

Hikvision Turkey
T +90 (216)521 7070- 7074
sales.tr@hikvision.com

Hikvision Kazakhstan
T +7-727-9730667
nikia.panfilov@hikvision.ru

Hikvision Tashkent
T +99-87-1238-9438
uzb@hikvision.ru

Hikvision Indonesia
T +62-21-2933759
Sales.Indonesia@hikvision.com

Hikvision Thailand
T +662-275-9949
sales.thailand@hikvision.com

Hikvision Malaysia
T +601-7652-2413
sales.my@hikvision.com

Hikvision Vietnam
T +84-974270888
sales.vt@hikvision.com

Hikvision Hong Kong
T +852-2151-1761
info.hk@hikvision.com

Hikvision Colombia
sales.colombia@hikvision.com

© Hikvision Digital Technology Co., Ltd. 2018 | Data subject to change without notice | 20190419