DS-3T0510HP-E/HS
8 Port Gigabit Unmanaged Harsh PoE Switch

DS-3T0510HP-E/HS switches are layer 2 Hi-PoE switches, providing PoE power supply technology and wider temperature (-30 °C to 65 °C) design on the basis of network access to ensure stable data upload. The switches support Hi-PoE, long range, port isolation, and PoE watchdog functions.

- 6 × gigabit PoE RJ45 port, 2 × gigabit Hi-PoE RJ45 port and 2 × gigabit SFP fiber optical port.
- IEEE 802.3at/af/bt standard for Hi-PoE port (Max. 90 W PoE output).
- IEEE 802.3at/af standard for PoE ports (Max. 30 W PoE output).
- IEEE 802.3, IEEE 802.3u, IEEE 802.3x, IEEE 802.3z and IEEE 802.3ab standard.
- 6 kV surge protection for PoE ports.
- Up to 300 m long-range transmission.
- PoE watchdog to auto detect and restart the cameras that do not respond.
- Port isolation to improve network security.
- Wire-speed forwarding.
- Wider temperature (-30 °C to 65 °C) design.
- Store-and-forward switching.
- Solid high-strength metal shell.
- Reliable fan-free design.

▪ Specification

General	
Shell	Metal material, fan-free design
Net Weight	0.585 kg (1.29 lb)
Gross Weight	1.11 kg (2.45 lb)
Dimensions (W × H × D)	197.0 mm × 114.2 mm × 42.2 mm (7.76'' × 4.50'' × 1.66'')
Operating Temperature	-30 °C to 65 °C (-22 °F to 149°F)
Storage Temperature	-40 °C to 85 °C (-40 °F to 185 °F)
Operating Humidity	5% to 95% (no condensation)
Relative Humidity	5% to 95% (no condensation)
Power Supply	54 V DC, 2.5 A
Max. Power Consumption	120 W
Power Consumption in Idle	10 W
Installation Mode	Desk-Mounted,Rail
Surge Protection	6 kV
Network Parameters	
Ports	8 × Gigabit PoE port,2 × Gigabit fiber optical port
MAC Address Table	4 K
Switching Capacity	20 Gbps
Packet Forwarding Rate	14.88 Mpps
Internal Cache	1.5 Mbits
PoE Power Supply	
PoE Standard	IEEE 802.3af,IEEE 802.3at,IEEE 802.3bt
PoE Power Pin	Ports 1 to 2: 8-pin power: 1/2(-), 3/6(+), ,4/5(+), 7/8(-) Ports 3 to 6: End-span: 1/2(-), 3/6(+) Ports 7 to 8: 8-pin power: 1/2(-), 3/6(+) ,4/5(+), 7/8(-)
PoE Port	Hi-PoE: Ports 1 to 2 PoE: Ports 3 to 8
Max. Port Power	Ports 1 and 2: 90 W Ports 3 to 8: 30 W
PoE Power Budget	110 W
Dialing Function	
Long Range	Ports 7 to 8: up to 300 m Long range performance may vary depend on camera model or cable condition.
Port Isolation	Ports 1 to 8: port isolation mode to improve network security.
PoE Watchdog	Ports 1 to 8: auto detect and restart the cameras that do not respond.
Approval	
EMC	FCC (47 CFR Part 15, Subpart B),CE-EMC (EN 55032: 2015+A11: 2020, EN IEC 61000-3-2: 2019, EN 61000-3-3: 2013+A1: 2019, EN 50130-4: 2011+A1: 2014, EN 55035: 2017+A11: 2020),IC (ICES-003: Issue 7:2020),RCM (AS/NZS CISPR 32: 2015)
Safety	UL (UL 60950-1),CB (AMD1:2009, AMD2:2013, IEC 62368-1: 2014 (Second Edition), CE-LVD (EN 62368-1: 2014+A11: 2017)
Chemistry	CE-RoHS (2011/65/EU)

▪ Key Component

Order Sap	Order Model	Type	Parameter
303703680	NDR-75-48	Industrial Power Supply	AC/DC Power Supply, Output 48V-55V, 0-1.6A, 75watts, Input 90-264VAC, 127-370VDC, DIN rail, -20~70℃
303703681	NDR-240-48	Industrial Power Supply	AC/DC Power Supply, Output 48V-55V, 0-5A,240watts, Input 90-264VAC, 127-370VDC, DIN rail, -20~70℃

▪ Typical Application

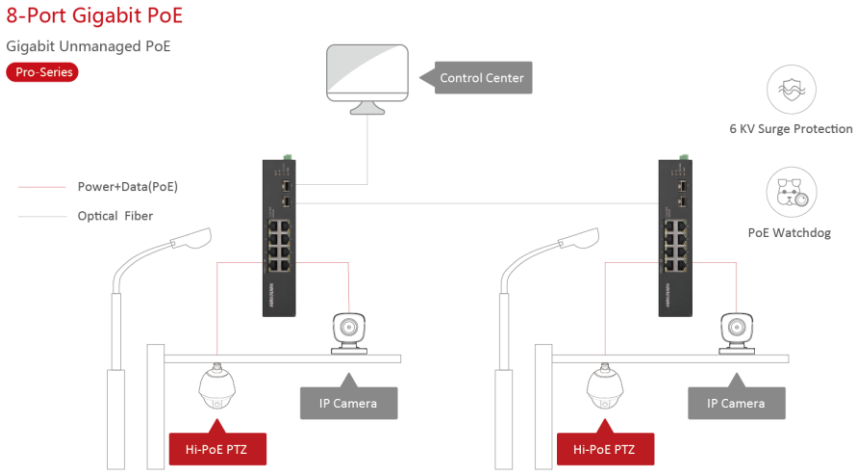

▪ Physical Interface

Front Panel

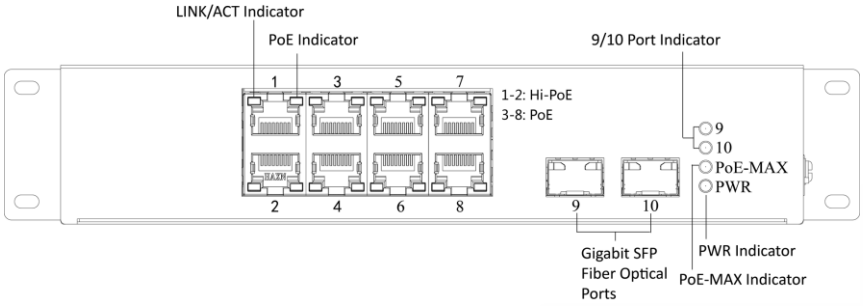

Side Panel

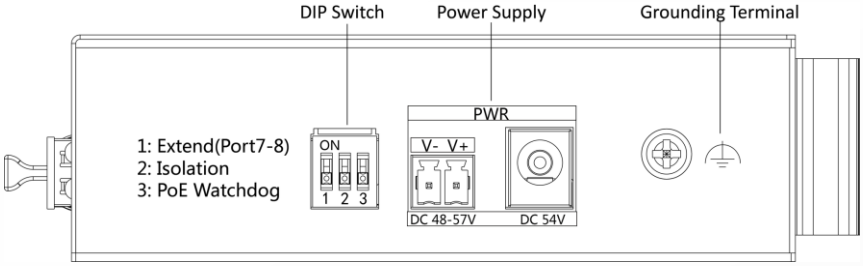

▪Dimension (Unit: mm)

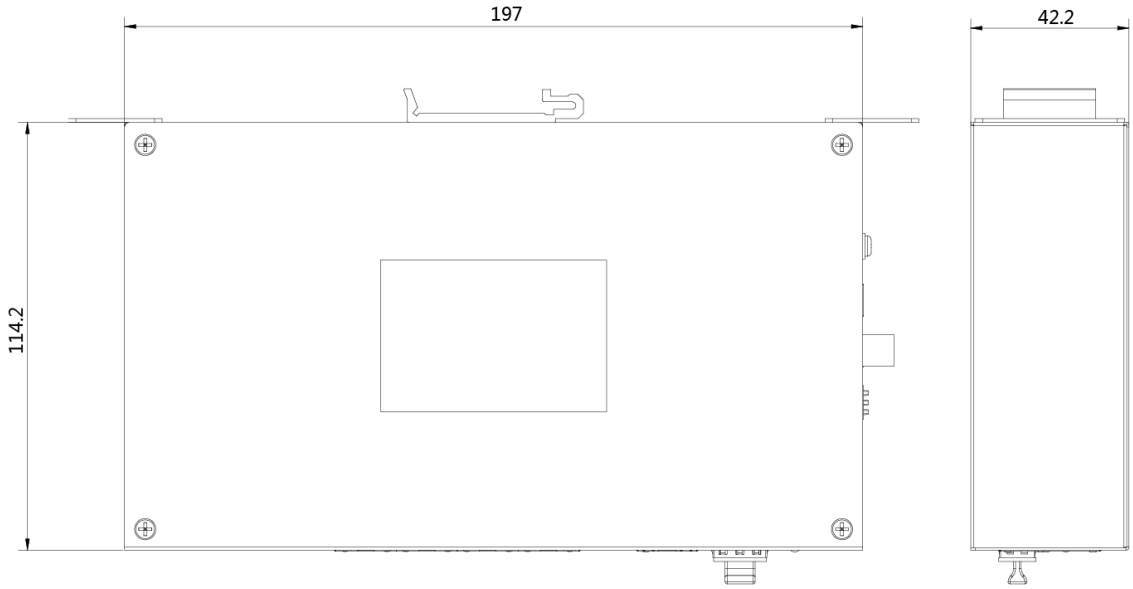

▪ Accessory

▪Optional

NDR-240-48	NDR-75-48	HK-SFP-1.25G-1310-DF-MM	DRL-48V240W1EN	HK-SFP-1.25G-20-1310-DF

HK-SFP-1.25G-20-1310	DRL-48V75W1AZ	HK-SFP-1.25G-20-1550

See Far, Go Further

www.hikvision.com
support@hikvision.com

© Hangzhou Hikvision Digital Technology Co., Ltd. Unless otherwise agreed, Hikvision makes no warranties, express or implied. We reserve the right to introduce modifications without notice.